EX-CELL KAISER
11240 Melrose Avenue
Franklin Park, IL 60131
Phone: (847) 451-0451
www.ex-cell.com

Streetscape Dome Lid - Replacement

Replacement/Installation Instructions

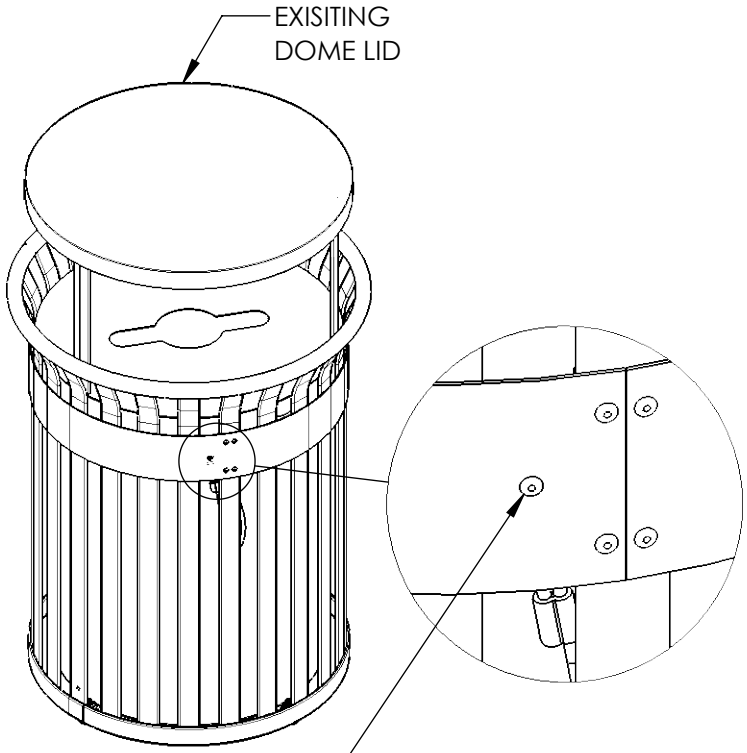

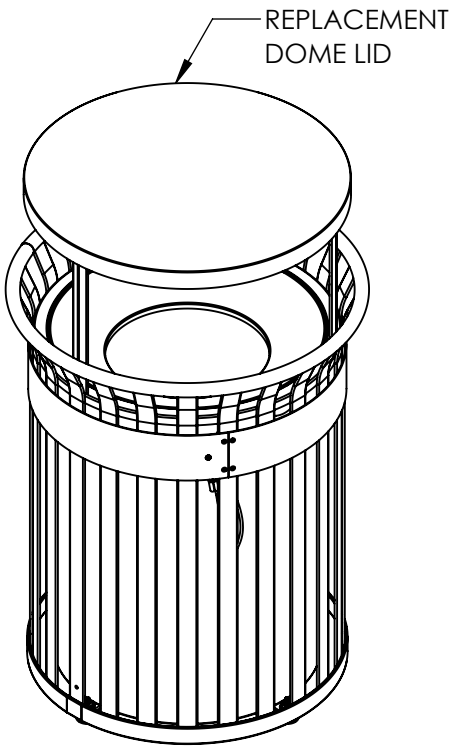

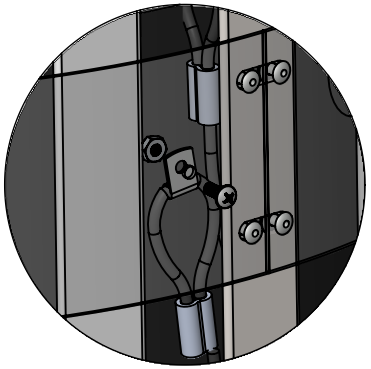

EXPLODED VIEW

STEP 1

DETACH EXISTING DOME LID ASSEMBLY BY DRILLING THROUGH RIVET LOCATED AS SHOWN.

RECOMMENDED DRILL BIT SIZE: 3/16"

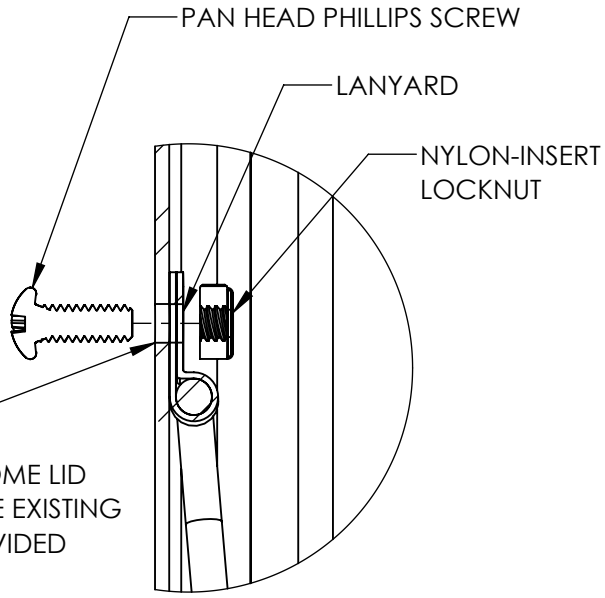

STEP 2

ATTACH NEW DOME LID ASSEMBLY TO THE EXISTING BODY WITH PROVIDED HARDWARE.

SECTION VIEW

79-028 Rev. 0

03/11/2026

THIS DRAWING IS THE PROPERTY OF EX-CELL KAISER, LLC.
ALL RIGHTS TO DESIGN AND INTENT ARE RESERVED TO BE USED ONLY FOR THE EXPLICIT WRITTEN PURPOSE AGREED TO BY EX-CELL, KAISER, LLC.